2

Fig. 5: Underdash
1987 Jeep Cherokee

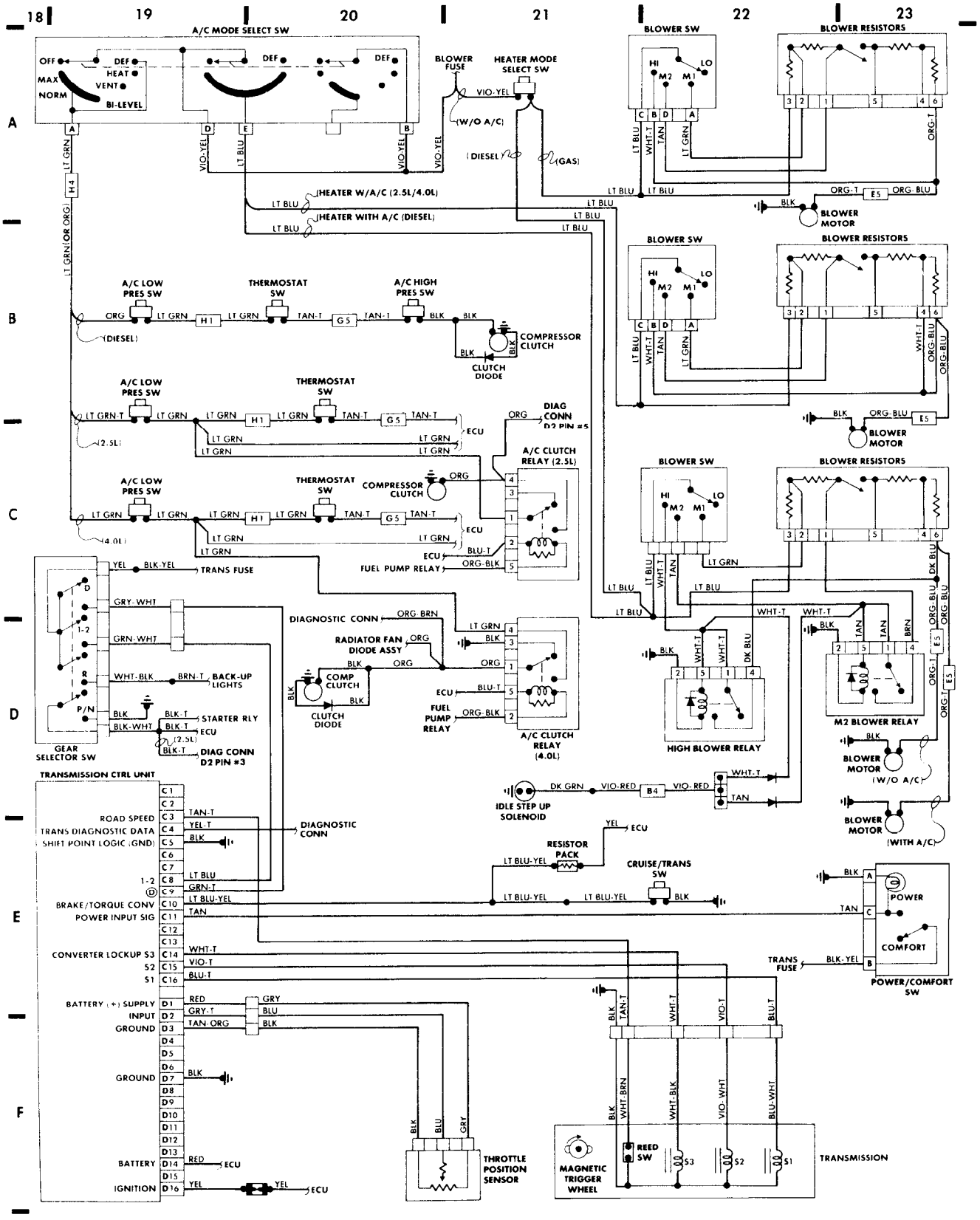

 © 2005 Mitchell Repair Information Company, LLC.